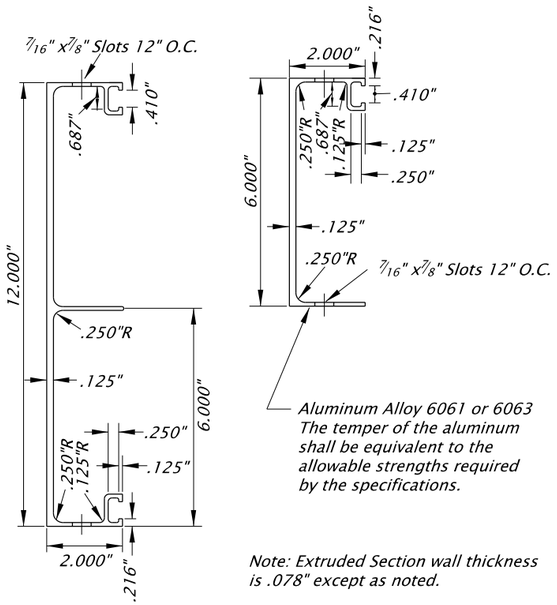

Note: Extruded Section wall thickness is .078" except as noted.

SIGN PANELS & DETAILS

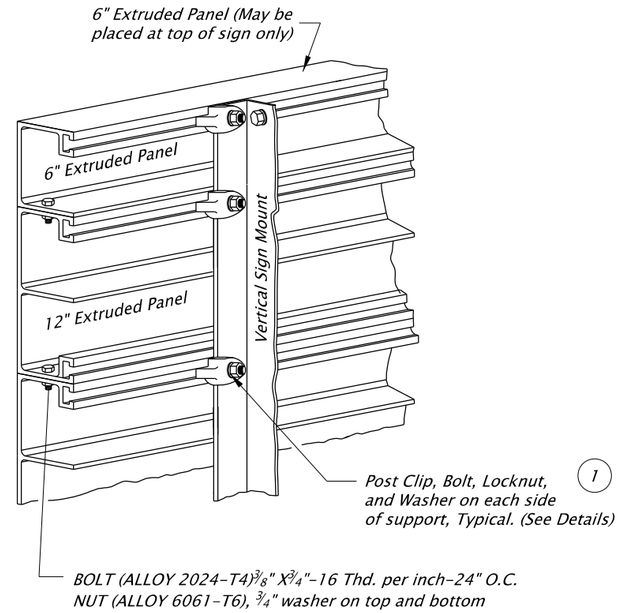

SIGN PANELS ON METAL STRUCTURES
No Scale

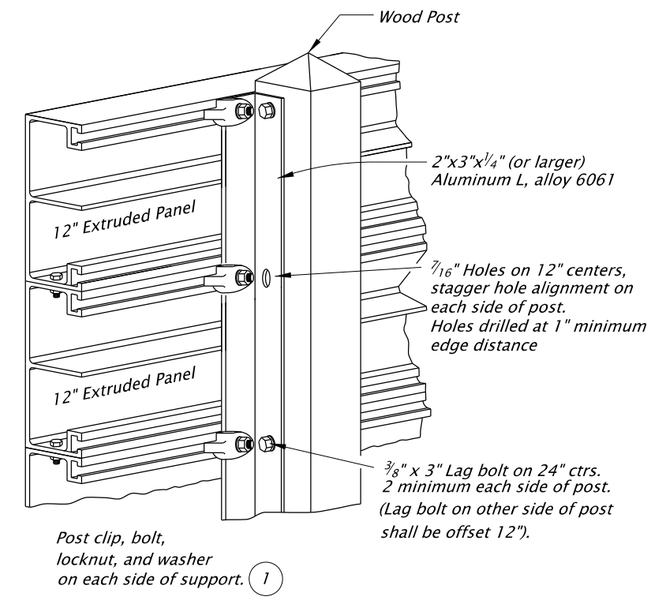

SIGN PANELS ON WOOD POSTS
No Scale

1 Note:
The locking feature of the nut shall be a nylon insert.

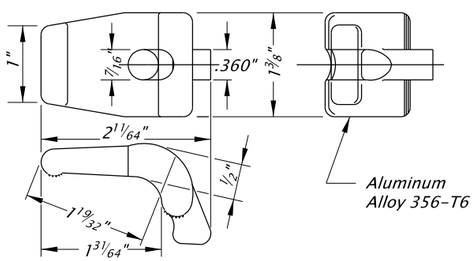

POST CLIP DETAIL

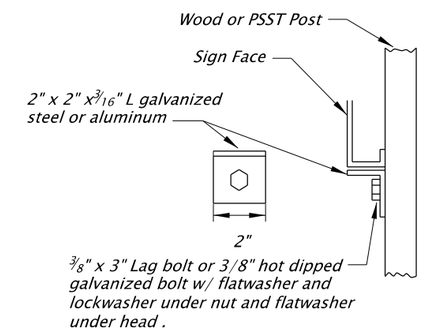

SIGN SUPPORT BRACKET DETAIL
1 Required per post

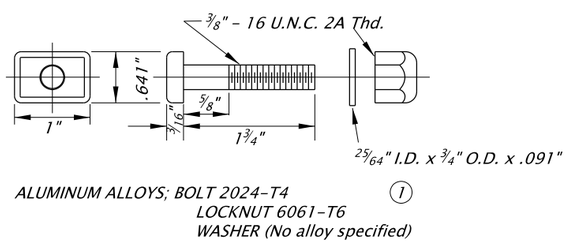

POST CLIP BOLT, NUT, & WASHER DETAIL

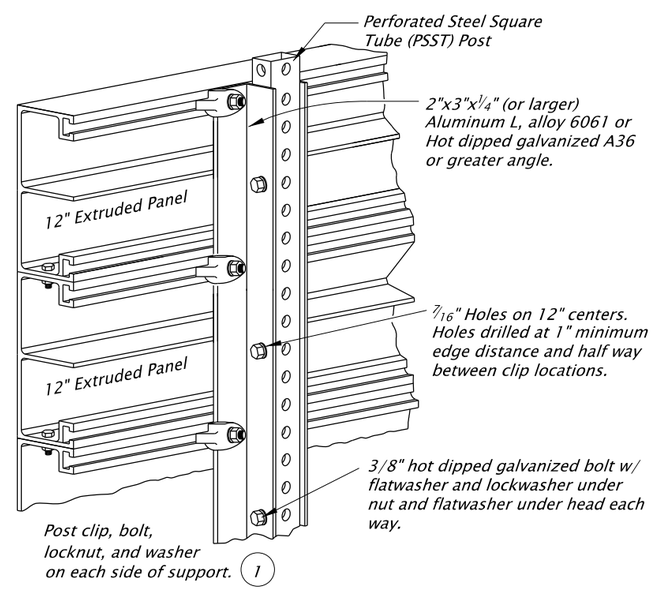

SIGN PANELS ON PERFORATED STEEL SQUARE TUBE (PSST) POSTS
No Scale

The selection and use of this Standard Drawing, while designed in accordance with generally accepted engineering principles and practices, is the sole responsibility of the user and should not be used without first consulting a Registered Professional Engineer.

All materials shall be in accordance with the current Oregon Standard Specifications.

OREGON STANDARD DRAWINGS

EXTRUDED ALUMINUM PANELS

2021

DATE	REVISION DESCRIPTION

CALC. BOOK NO. N/A | SDR DATE 06-JAN-2017 | **TM675**

Effective Date: June 1, 2023 - November 30, 2023